MOLDED GRATINGS

Grating type SCH 52/40_IFR

Mesh	**mm 52 x 52** main **mm 26 x 26** secondary	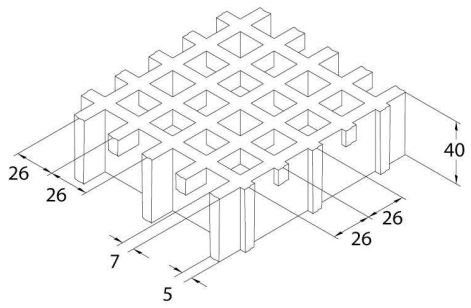
Clear span	**mm 19 x 19**	
Height	**mm 40**	
Bearing bar thickness	**mm 7** upper part	
	mm 5 bottom part	
Color	**Grey RAL 7004**	

Raw materials	***Polyester Resin***
	Roving glass fiber type"E"
	Inorganic fillers without halogens

Standard panels		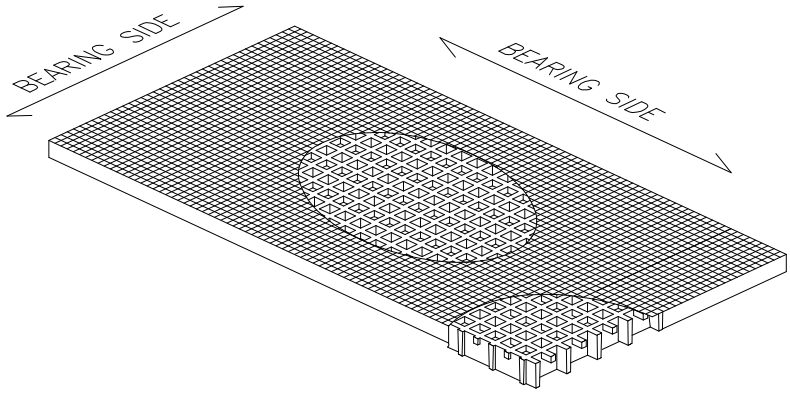
mm 1000 x 2000		
mm 1000 x 3000		
mm 1000 x 4050		
mm 1500 x 2000		
Weight kg/m² 21		
tolerance	± mm 5 panel dimensions	
	± mm 2 height	

Surface	S	**Smooth**	***Antiskid level R10 V10 norm DIN E51130***
	M	**Meniscus**	***Antiskid level R13 V10 norm DIN E51130***
	A	**Quartz**	***Antiskid level R13 V10 norm DIN E51130***

Reaction to fire	***Fire retardant***	**Spread ≤ 25 norm ASTM E84-98**
		Level V-0 norm UL94 Vertical Burning Test

Ageing resistance	**Ageing test made with UV lamp according to ASTM G154-06 and passed with 5 points on the gray range and without evident defects** (test made with 1500 hours of exposure to 4 hours alternate cycles at a UV temperature of 60°C and 4 hours at a condensed temperature of 50°C irradiated by UVB 313 nm lamp, radiance 0,71 W/m²)
	After the exposure to heat, cold and humidity cycles according to UNI EN ISO 9142/04 norm (n° 21 cycles type D3) there is no evidence of defects

M.M. S.r.l.
Via A. Zanussi 300 / 302, 33100 Udine (Italy)
Ph. +39 0432.602218 / 522970 - Fax. +39 0432.522253
info@mmgrigliati.it - www.mmgrigliati.it

LOADS

MAXIMUM SUGGESTED LOADS

Type of support	**On the line of the two ends of the panel**

Limits determined by	**Deflection** (load sagging)
the **maximum deflection admitted** is 1/100 of the distance between the supports	

DISTRIBUTED LOAD	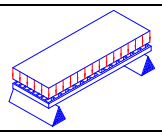		**CONCENTRATED LOAD**	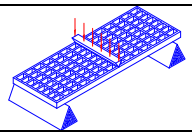
Distance between supports [cm]	Load with deflection equal to 1/100 [kg/m²]		Distance between supports [cm]	Load with deflection equal to 1/100 [kg/m]
50	4850		50	1500
70	1750		70	750
90	800		90	450
110	450		110	300
All lighter loads are admitted				

Limits determined by	**Admitted stresses** (stress determined by the load)
the **maximum admitted stress** is 1/5 of the breakdown stress (safety coefficient is equal to 5 – the breakdown stress is 5 times the specified load)	

DISTRIBUTED LOAD	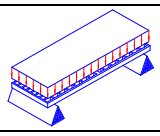		**CONCENTRATED LOAD**	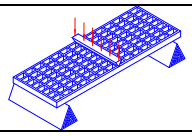
Distance between supports [cm]	Maximum admitted load [kg/m²]		Distance between supports [cm]	Maximum load admitted [kg/m]
50	7500		50	1850
70	3800		70	1300
90	2300		90	1000
110	1550		110	850
All lighter loads are admitted				

The information specified in the above table is to be considered as an average value and variations may reach a ±15%.
The above characteristics are meant as reference values for standard material. Even if they are not to be considered as guaranteed characteristics they are based on our experience and are supplied in good faith.

M.M. S.r.l.
Via A. Zanussi 300 / 302, 33100 Udine (Italy)
Ph. +39 0432.602218 / 522970 - Fax. +39 0432.522253
info@mmgrigliati.it - www.mmgrigliati.it